651838999

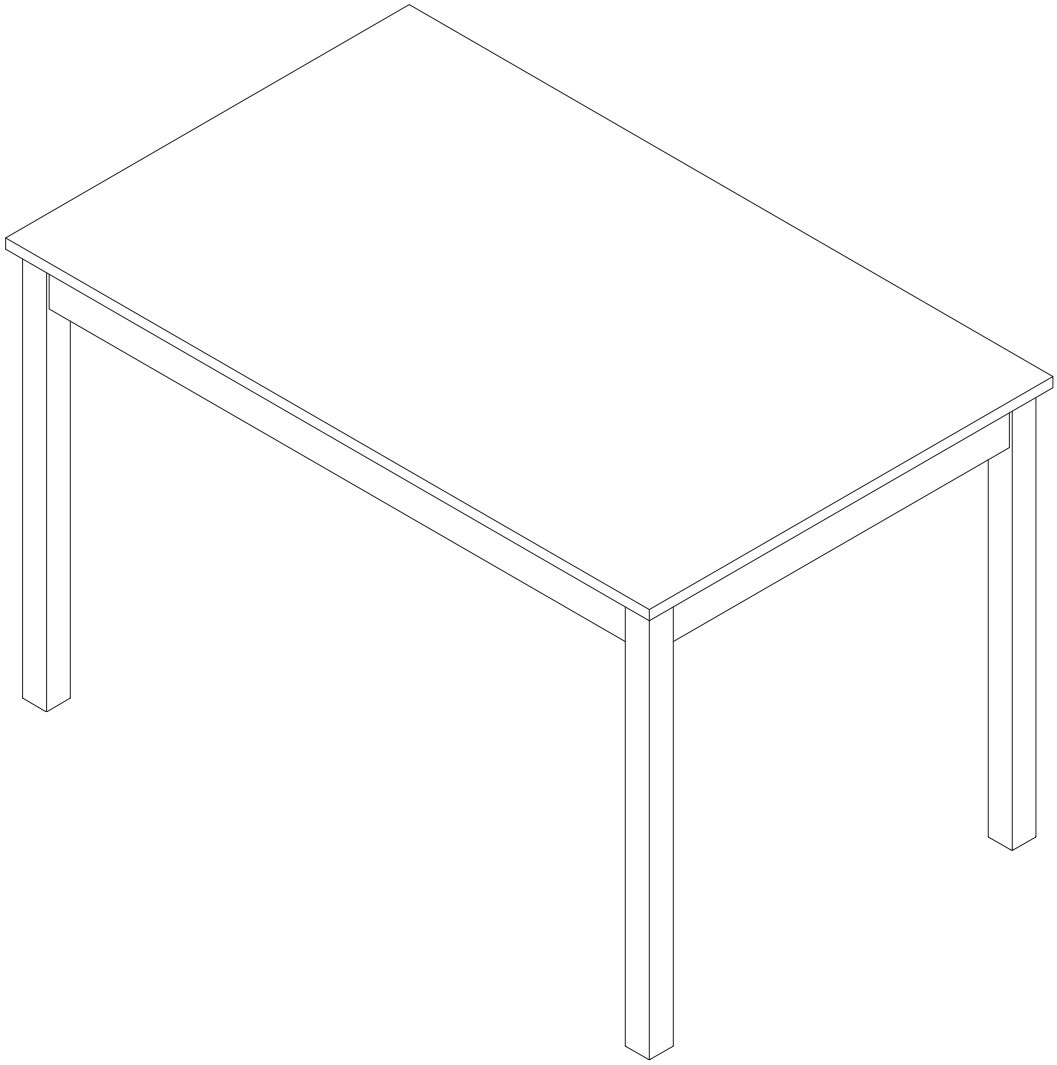

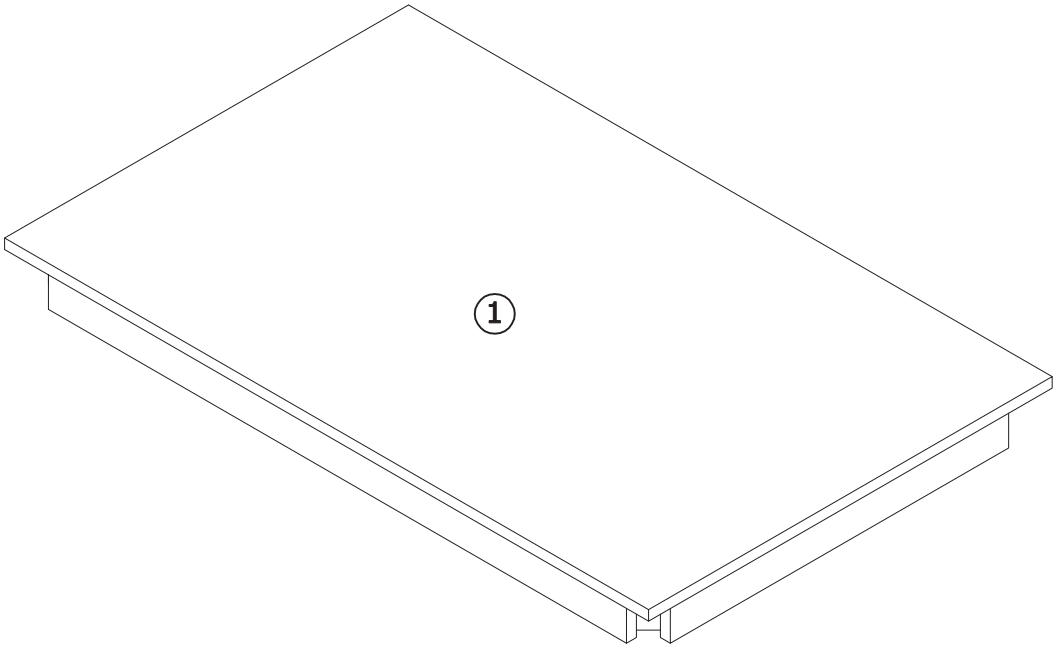



A	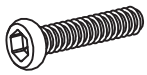	x8		B		x1
C		x8		D		x8

1	Ax8 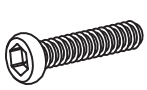	Bx1 	Cx8 	Dx8 	

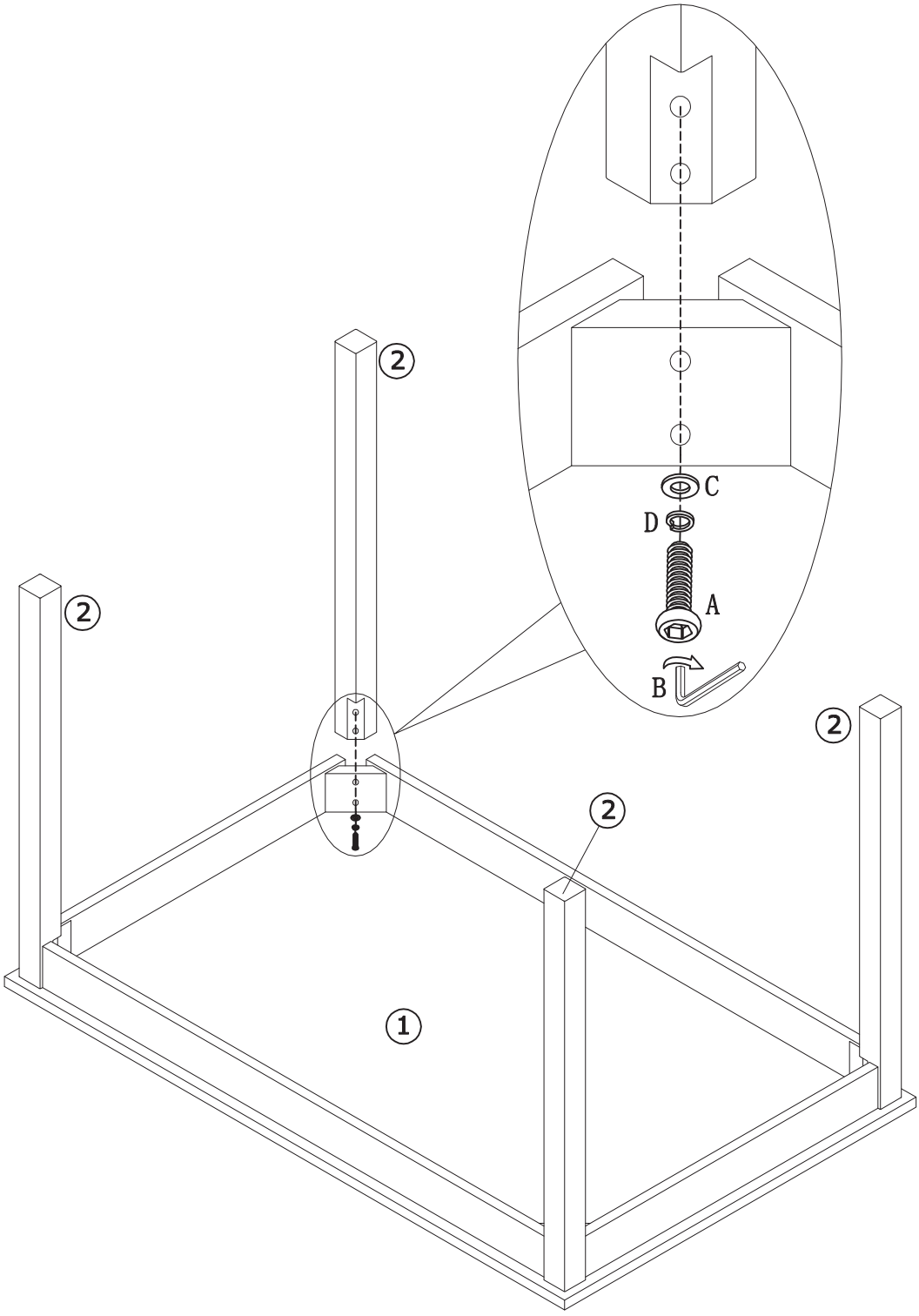

651838999

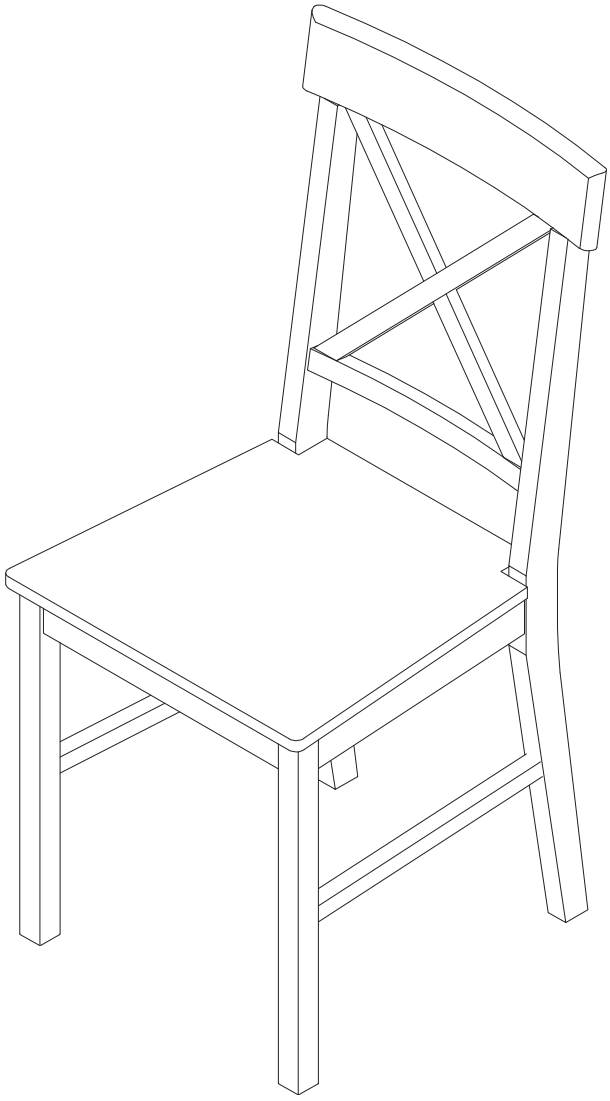

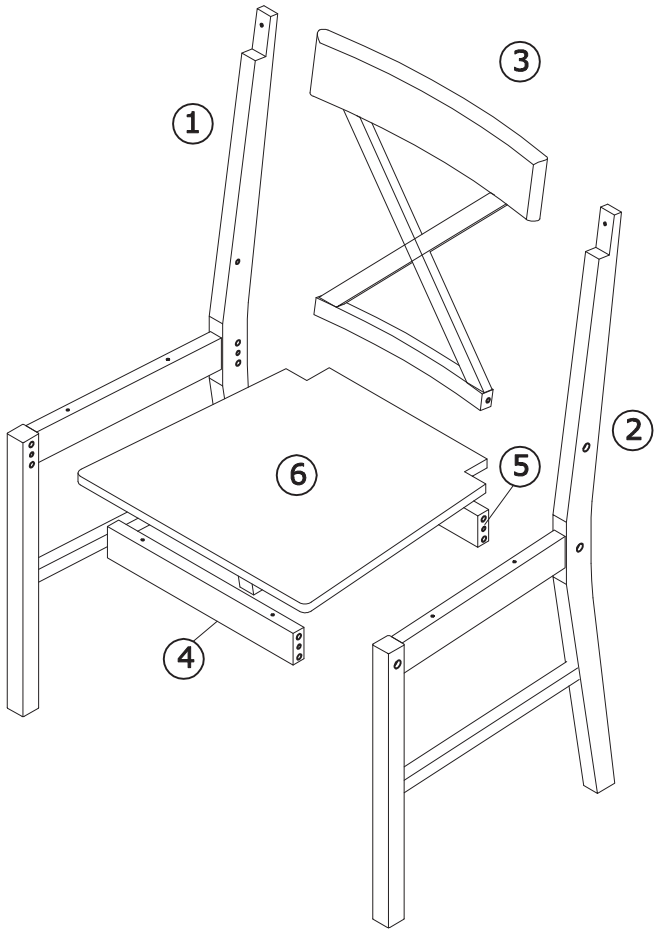

A	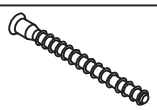	x6		B		x1
C	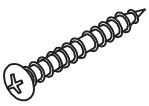	x4		D	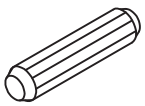	x8
E	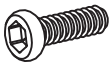	x2		F		x8

1	Dx8 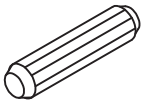		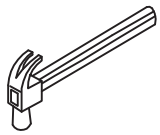 NO PROVIDED

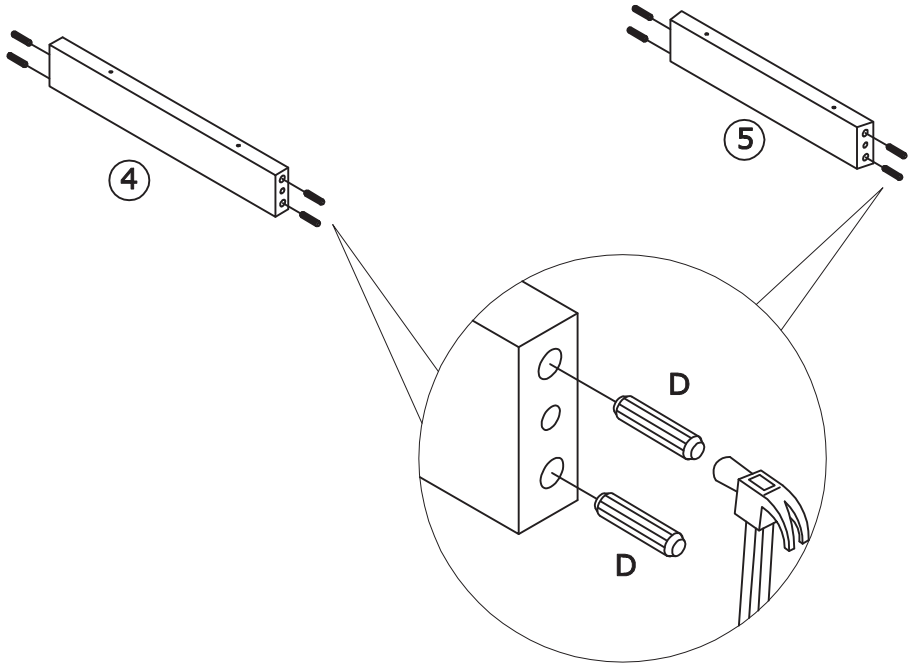

2	Ax4 	Bx1 		

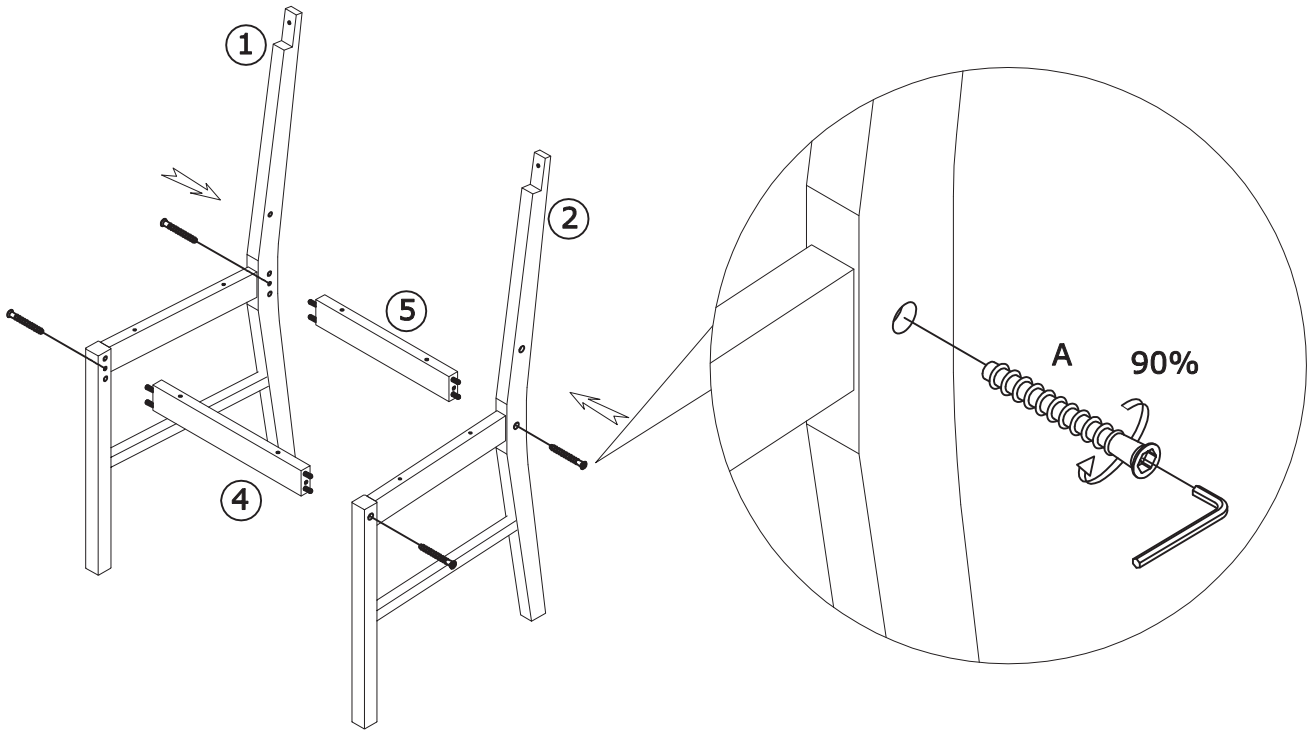

3	Ex2	Ax2	Bx1		

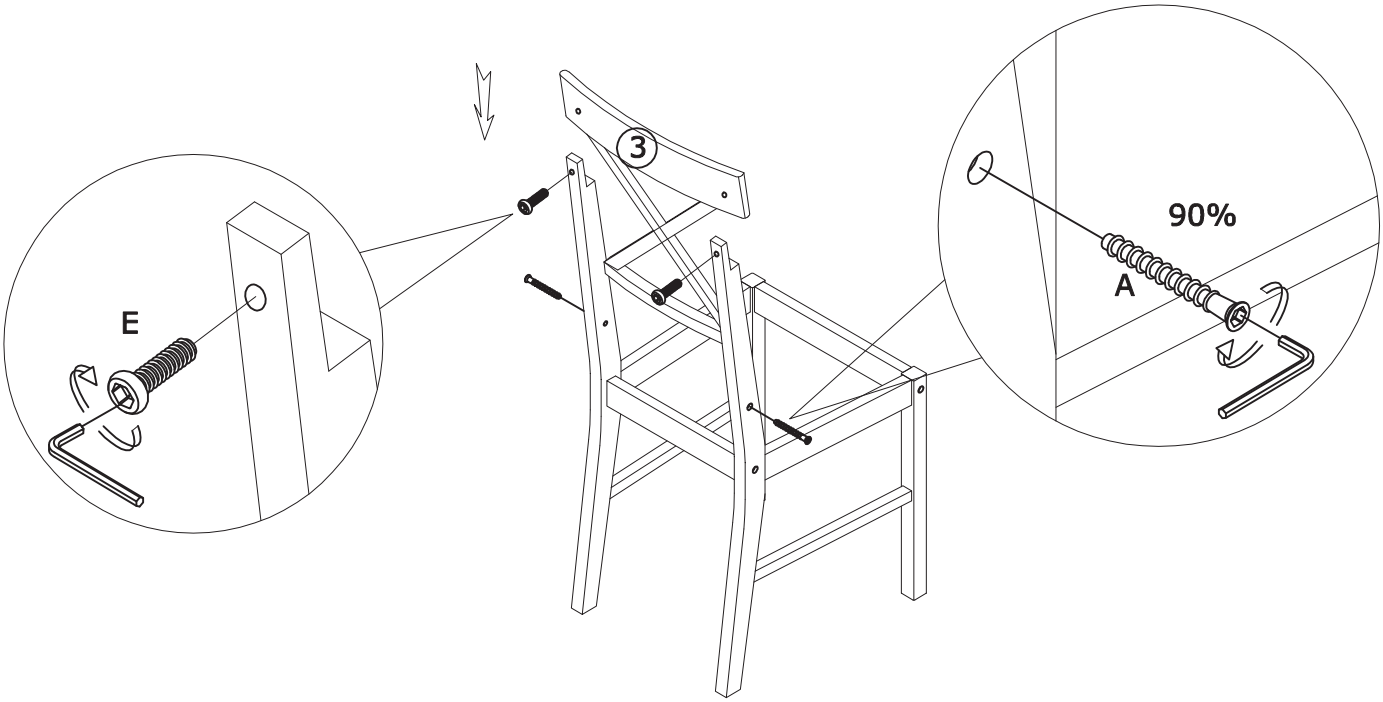

4	Cx4		NO PROVIDED

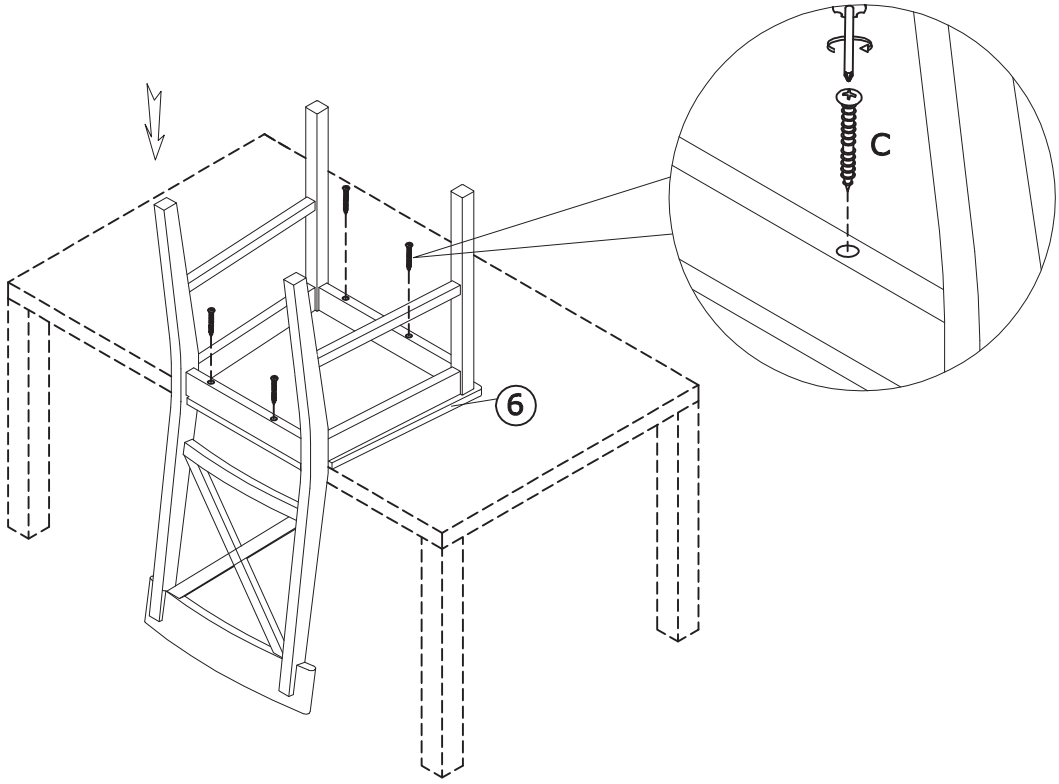

5	Bx1 	Fx8 		

